ITEM NO.	QTY.	PART/DRAWING NO.	DESCRIPTION	MATERIAL
1	1	2-57TM-08200-00-1TG	2-57TM SER. 8.00 X 2.00 SWL. RIG C/W TG FRAME	MISC.
2	2	08202-44-12	Ø8.00 X 2.00 ET85 TWERGO WHEEL C/W .75 BORE	MISC.
3	1	LN121612	3/4-16 CENTER LOCK LOW HEIGHT JAM NUT, ZINC PLATED	STEEL
4	1	SB12163901	.76 ID X 1.00 OD X 2.438 LGT. SPACER	AISI 1026
5	1	AX121440001	3/4-16 X 9" LGT GRADE 8 HHCS	STEEL
6	2	2-57TM-08000-15TG	2-57TM SER. 8.00 TG OUTER FRAME	AISI 1008

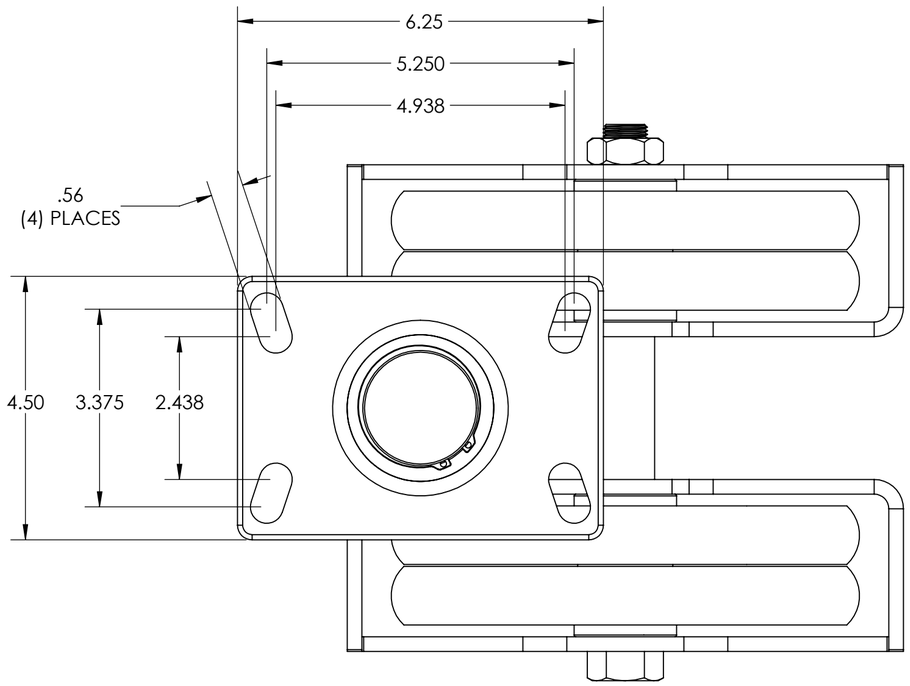

NOTES:
1. RIG IS NOT TO HAVE AN AXLE STOP.
2. AXLE IS TO BE GRADE 8.

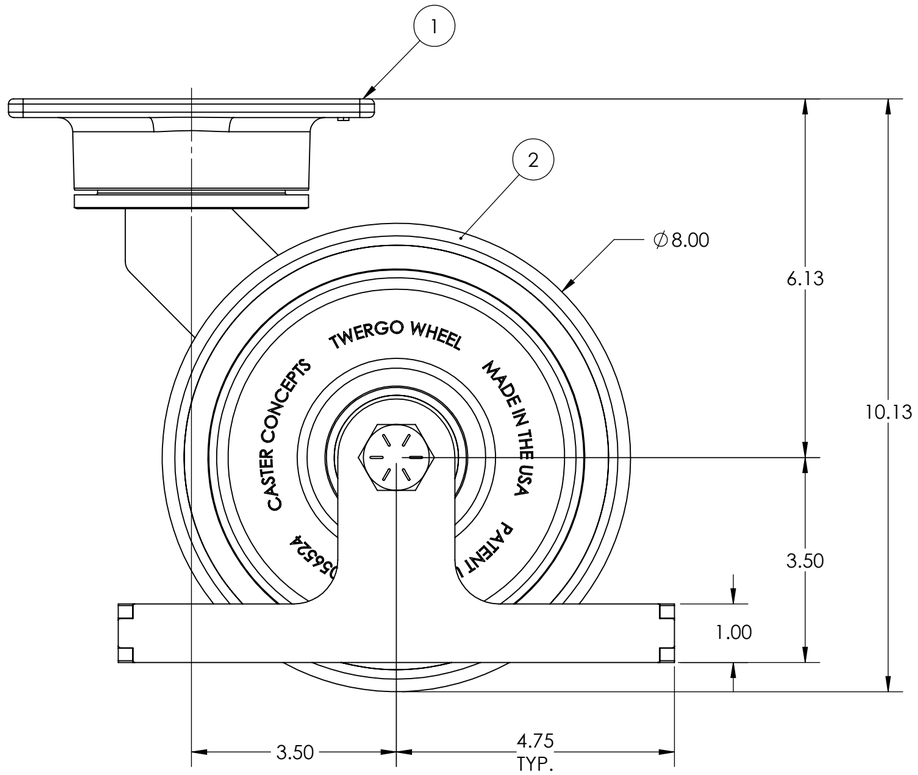

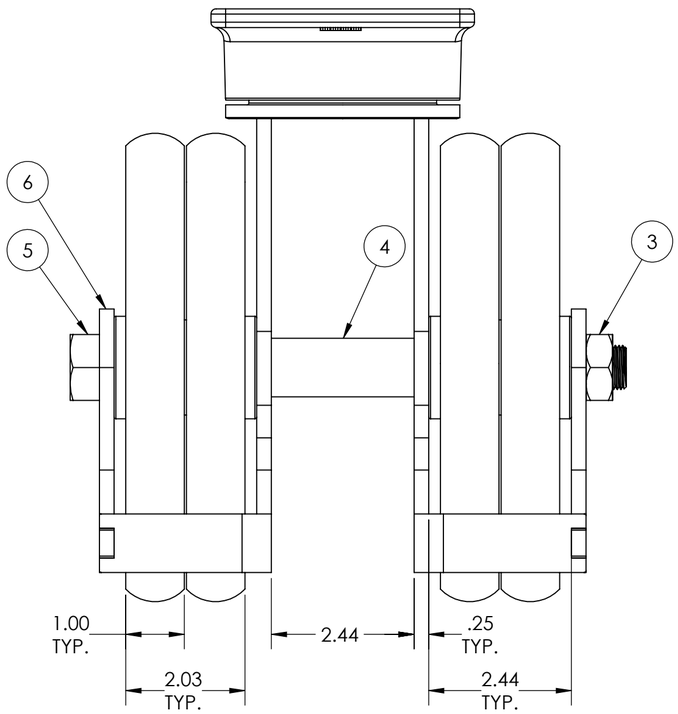

CASTER CONCEPTS, INC.
16000 E. MICHIGAN AVE.
ALBION, MI 49224
(517)629-8838
casterconcepts.com

TOLERANCE SPECS.	UNLESS OTHERWISE SPECIFIED THE FOLLOWING TOLERANCES APPLY: .XX = ±.030 .XXX = ±.010 X° = ±1.0° PART TO BE FREE OF BURRS AND SHARP EDGES	DESCRIPTION:	2-57TM SER. 8.00 X 2.00 SWL. CASTER C/W TG		
		PART/DRAWING NO:	2-57TM-08202-44-1TG	DATE:	9/21/2022
FINISH SPECS.	ZINC PLATING ON RIG			SCALE: 1:2	C-SIZE
MATERIAL SPECS.				THIRD ANGLE	

WHERE USED:

CHECKED BY: PRAVEEN K. APPROVED BY: DRAWN BY: TARUN B.

NOTICE:THIS DRAWING AND DESIGN INFORMATION CONTAINED HEREIN SHALL REMAIN THE SOLE PROPERTY OF CASTER CONCEPTS INC. IT IS SUBMITTED FOR USE IN REFERENCE ONLY AND SHALL NOT BE DUPLICATED OR GIVEN TO A THIRD PARTY WITHOUT THE WRITTEN CONSENT OF CASTER CONCEPTS INC. THIS DRAWING MUST BE RETURNED TO CASTER CONCEPTS INC. UPON REQUEST AT ANY TIME. ACCEPTANCE OF THIS DRAWING SHALL BE CONSTRUED AS AN AGREEMENT OF THESE TERMS.